适应基板厚度：1.2mm~1.6mm
温度范围：-25℃~85℃
额定电压：125V AC/DC
额定电流：1A
接触电阻：≤0.02Ω
绝缘电阻：≥100MΩ
耐　压：500V AC/minute

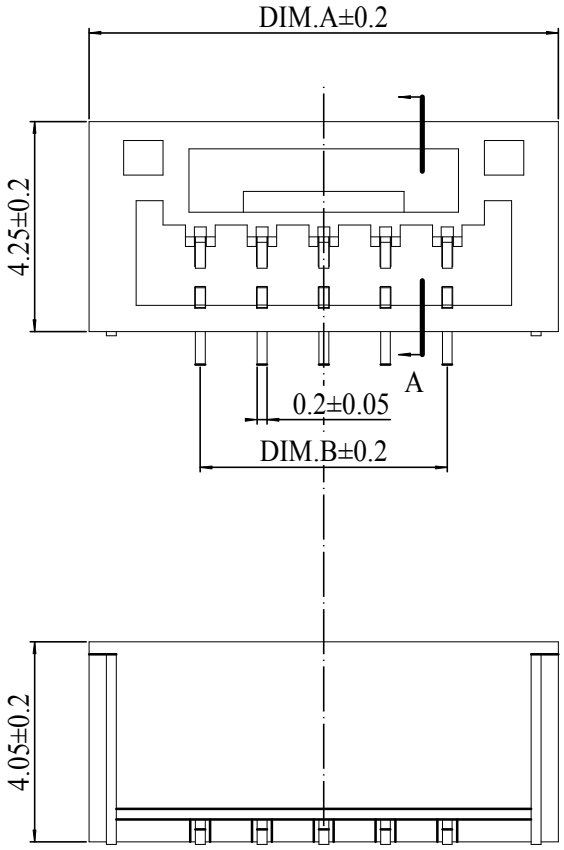

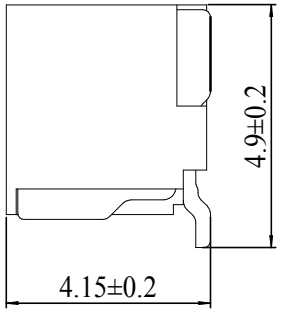

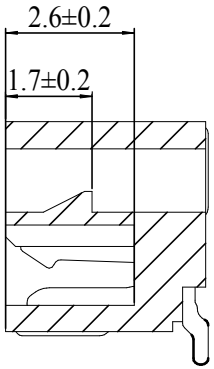

A-A

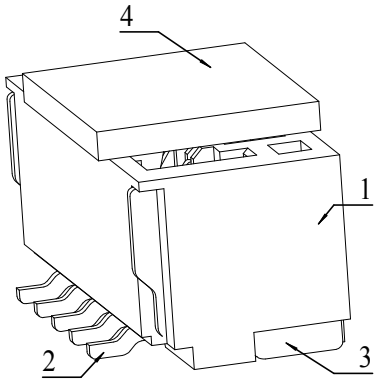

印制线路板

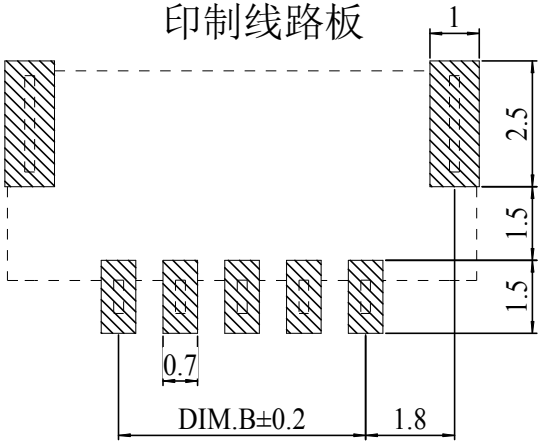

Pin	DIM.A	DIM.B
15	22.00	17.50
14	20.75	16.25
13	19.5	15.00
12	18.25	13.75
11	17.00	12.50
10	15.75	11.25
9	14.50	10.00
8	13.25	8.75
7	12.00	7.50
6	10.75	6.25
5	9.50	5.00
4	8.25	3.75
3	7.00	2.50
2	5.75	1.25

PART N0	Material	Suitable Housing	Suitable Terminal
1251WVS-XXP	LCP UL94V-0	1251H	1251T

NO.	NAME	Q'TY	DESCRIPTION
4	Cap	1 PCS	材质:LCP (UL94V-0),颜色:本色或黑色
3	FITTING NAIL	2 PCS	材质:磷青铜,电镀:镀亮锡60u"MIN
2	PIN	n PCS	材质:磷青铜,电镀:镀亮锡60u"MIN
1	Housing	1 PCS	材质:LCP (UL94V-0),颜色:本色或黑色

ECN BO.	DESCRIPTION.	DATE.	REV.
———	new	2015/5/3	A

瀚源

DESIGNED	CHECKED	APPROVAL	DRAWING NUMBER		SCALT: 1/2	SCALE: 3:1
Mikey	Tom	Jerry	PART NAME	1251WVS-XXP	UNLESS OTHERWISE SPECIFIED,TOLERANCE:	X. ±0.25 X.x ±0.20 X.xx ±0.15 ANGULAR ±3°
			MODEL NAME	H-1251WVS-XXP		
			3RD ANGLE PROJ	HanElectricity Co.,LTD		FILE.NO.