REVISION			
LTR	DESCRIPTION	DATE	APP
A0	NEW RELEASE	09/15/2021	PECK

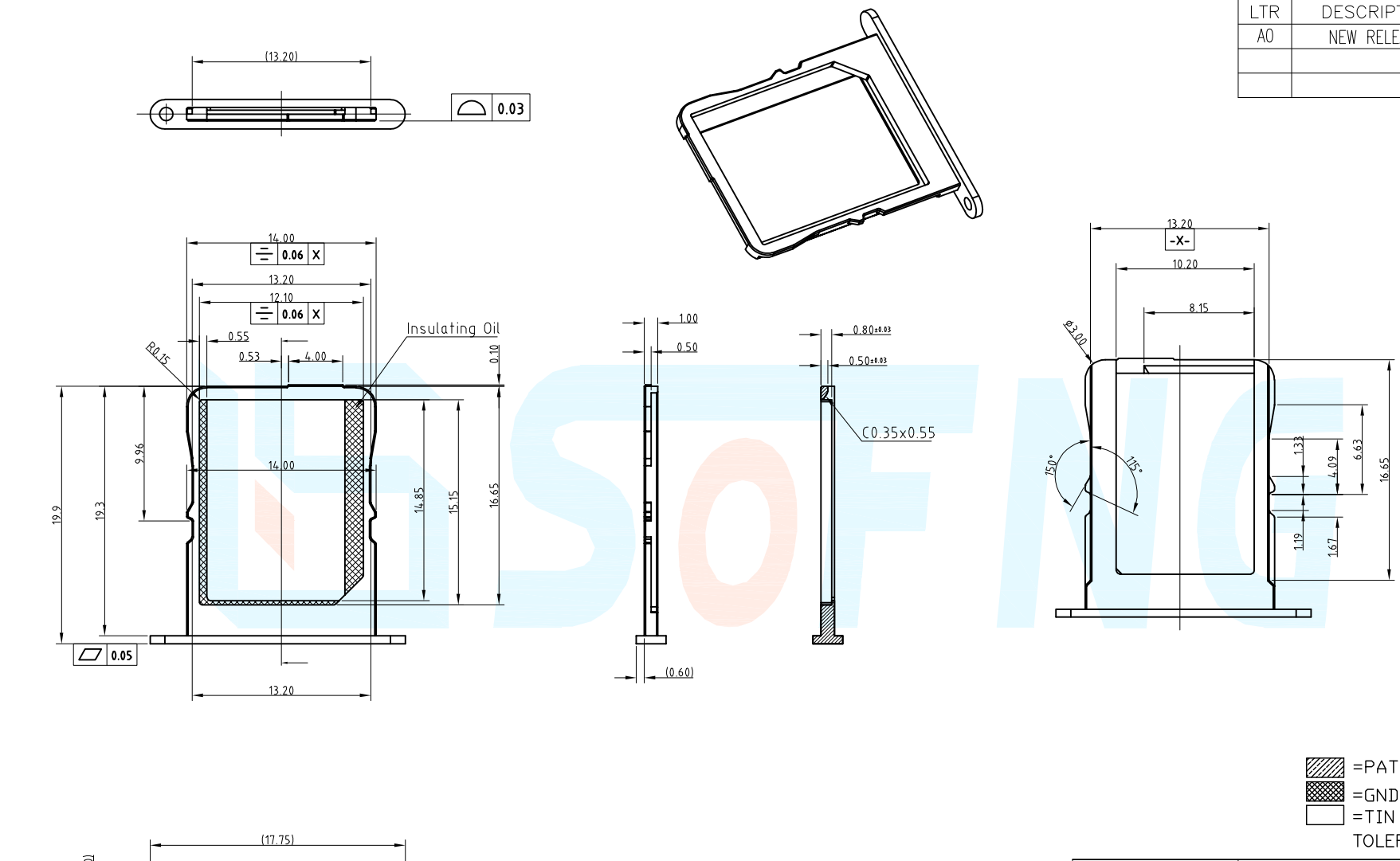

=PATTERN PROHIBITED AREA
=GND AREA
=TIN AREA
TOLERANCE ±0.05

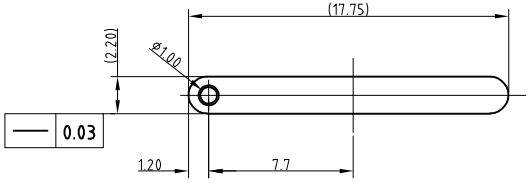

NOTE:

1. Powder Metallurgy Material: Stainless Steel (e.g. 17-4PH F)
2. Finish: PVD/Electrophoresis
3. Appearance is not Acceptable: Corrosion,Poor Coating ,Scratches, Warping Sharp Edges(saw burrs),Bumps,Poor Plating, Stains
4. Surface needs to be Done to Deal with Passivation
5. Unless Otherwise 0.10mm Round;
6. Please Contact PROMAX Sales Representive to Verify Product Details.

DIMENSION CLASSIFICATION			台灣碩方精密電子科技有限公司 TAIWAN SOFNG PRECISION ELECTRONIC CO., LTD					
■ : CRITICAL								
☒ : MAJOR			TITLE	SMO-1517-KT MICRO SIM卡托			開關,連接器 SOFNG	
TOLERANCE TABLE								
.X	±	0.40	PART NO.	SOF-G006			SERIES	SD106
.XX	±	0.25	APPROVED	Peck	DWG NO.	SMO-1517-KT		
.XXX	±	0.10	CHECKED	Paul	SCALE 1:1	UNIT mm	SIZE	A4
ANGLE	±	2°	DRAWIN	David		REV A0	SHEET NO.	1/1