发行版本 Revision	修改内容 Description	制图 Drawing	日期 Date
A / 0	First release	Ding	2023.06.02

Pin layout

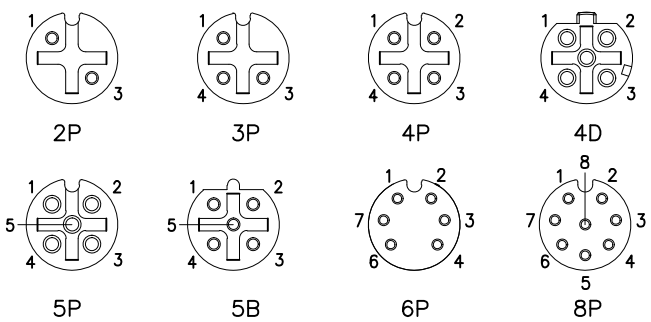

Technical specifications:

Coupling:	Threaded coupling
Termination:	screw
Pollution degree:	3
Temperature range:	−40°C ~ +80°C
Degree of protection:	IP67 when mated
Mating cycles:	⩾500
Suitable cable Dia:	PG7:4~6mm; PG9:6~8mm
Wire gauge:	2~5Pin:AWG22; 6~8Pin:AWG24

Materials:

Contact:	Brass
Contact plating:	Gold plated
Contact insert:	PA66 UL94−V0 Black
Base shell:	PA66 UL94−V0 Black
Hex nut:	Brass nickel plated
Seal:	NBR

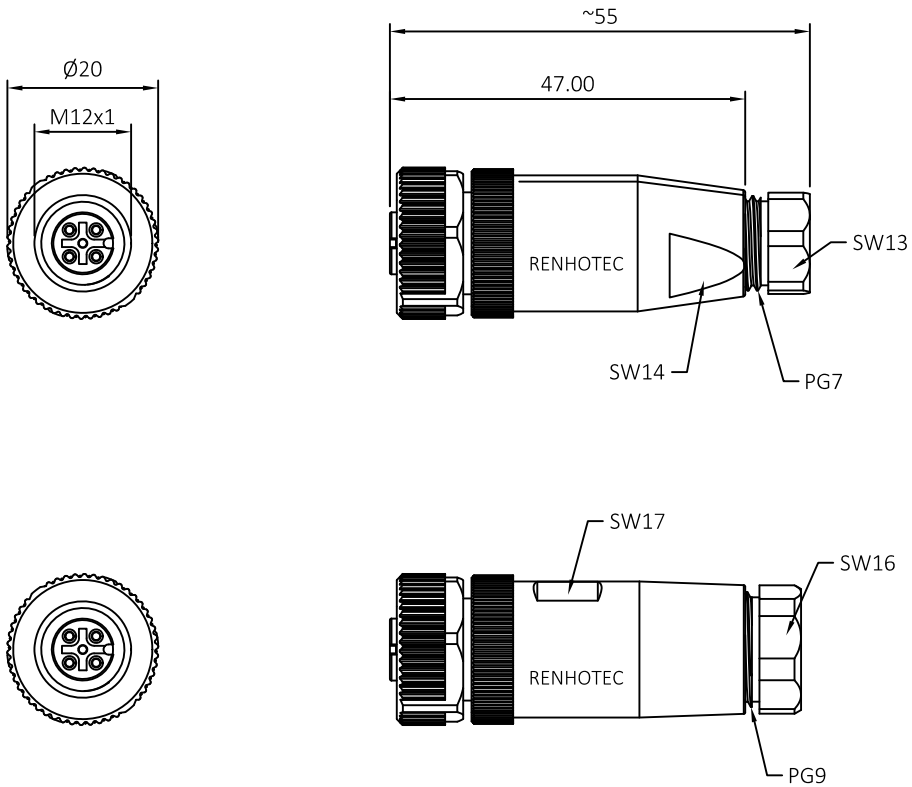

PIN	2	3	4	4D	5	5B	6	8
Rated voltage/ Current	4A/250V	4A/250V	4A/250V	4A/250V	4A/60V	4A/60V	2A/30V	2A/30V
Rated pulse voltage	2500V	2500V	2500V	2500V	1500V	1500V	800V	800V
Insulation resistance (MΩ)	⩾100	⩾100	⩾100	⩾100	⩾100	⩾100	⩾100	⩾100
Contact resistance (mΩ)	≤ 5	≤ 5	≤ 5	≤ 5	≤ 5	≤ 5	≤ 5	≤ 5

dosinconn DOSIN INDUSTRIAL(HK)CO.,LTD
江门市德索连接器有限公司
Jiangmen Dosin Connector Co., LTD
Web:http://www.dosinconn.com
Dosin2005@dosin-china.com
Tel:(0086)769-81153906
Fax:(0086)769-81875836

客户料号 Cus' P/N		图号 File No.	RHT-634-3371	品名 Name	M12 Female connector Assembly,Screw joint
未注公差 Unless Otherwise Specified		单位 Unit	mm	版本 Revision	A/0
线性 Linear	0.5~6 ±0.1	比例 Scale	--	图纸确认 APPROVAL	日期 Date
	>6~30 ±0.2			绘图 Drawing	Ding 2023.06.02
	>30 ±2%	页码 Page	1 / 1	审核 Checked	Jim 2023.06.02
角度 Angles	±3°			客户确认 Customer Approved	

Third Angle Projection