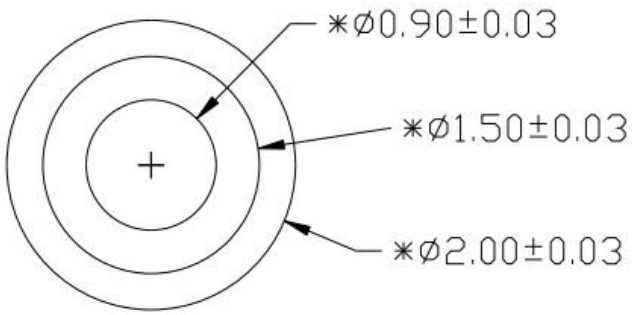

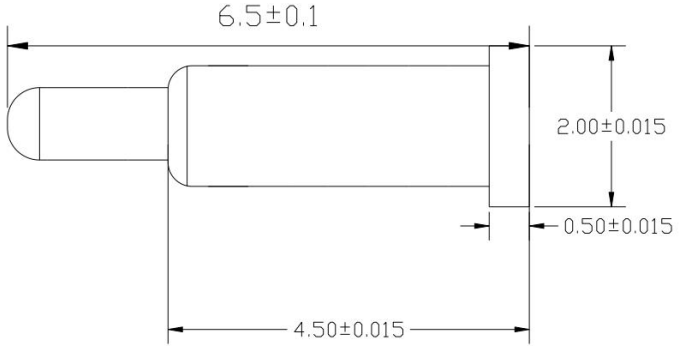

1. **Material:**

   Contact:Brass

   Spring: Stainless steel wire

   Plug : Brass

2. **Plating**

   Body:Min 1u" Gold plating over

   Plug :Min 1u" Gold plating over

3. **Mechanical properties**

   Elastic at working height: 100g ± 20g

   Durability:10000 cycle min

4. **Electrical performance:**

   Voltage rating:30V DC MAX

   Current rating:1.5A

   Impedance: <30mΩ:1.5A

5.Unspecified tolerance ± 0.03 mm

6.All dimensions marked with "*" are tested.

Third Angle				Machine		Date	18-10-27
0~10	±0.10	○	0.02	Description	6.5 Single Pogo Pin	Drawn	
10~20	±0.15	◎	θ0.03	Part number	BWCD-L6.5W2.0H2.0	Checked	
20~40	±0.20	⊥	0.02	Material	Gold plated Brass	Approved	
>40	±0.25	▱	0.04	Mold finish		Unit	mm
				Appearance finish		Scale	

蝙蝠无线 BAT WIRELESS

Shenzhen Bat Wireless Technology Co.,Ltd.