REV	DESCRIPTION	DESIGN	APPROVAL	DATE
A0	NEW VERSION	Yuan	Jerry	2023/08/21

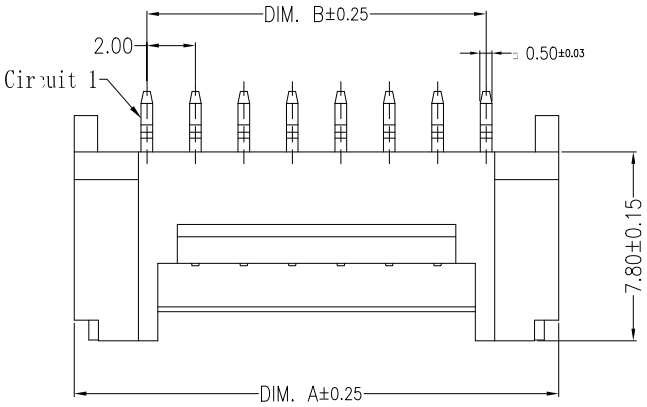

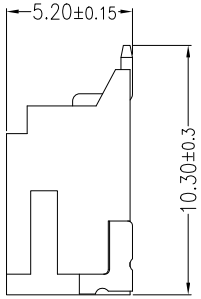

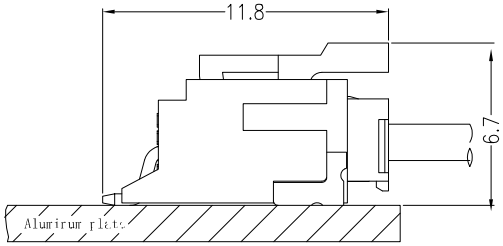

Assembly Layout

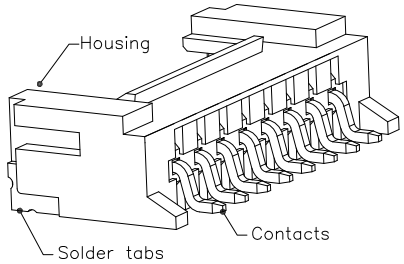

3D VIEWS

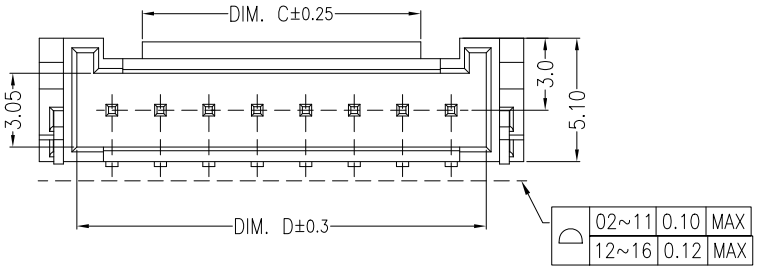

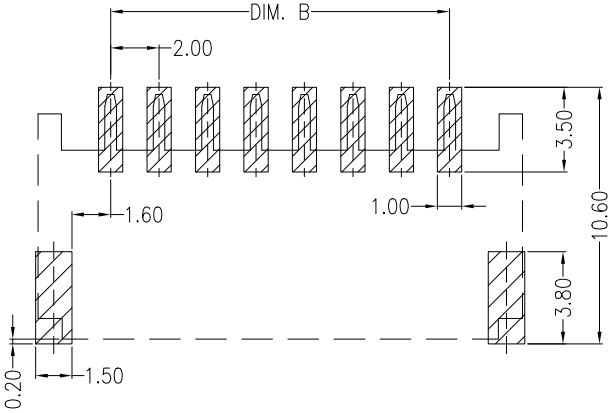

SUGGESTED PCB LAYOUT

Main Spec Specifications/主要技术参数

1. Material/材质:
   Housing/塑胶：LCP UL94V-0; Natural/本色;
   Contacts/端子:Brass Sn-Plated/黄铜，镀锡;
   Solder Tabs/针脚:Brass Sn-Plated/黄铜，镀锡
2. Rated Current/额定电流：2.0A AC/DC;
3. Rated Voltage/额定电压：250V AC/DC;
4. Contact Resistance/接触电阻：≤20mΩ;
5. Insulation Resistance/绝缘阻抗：≥1000MΩ;
6. Withstand Voltage/耐电压：1000V AC/minute;
7. Temperature Range/工作温度：-25℃~+105℃
8. Order information/编码原则：991-XX1-7123
   XX1 — Poles/线数

CKT	P/N	DIM(mm)			
		DIM.A	DIM.B	DIM.C	DIM.D
02	991-021-7123	8.00	2.00	2.70	4.75
03	991-031-7123	10.00	4.00	3.20	6.75
04	991-041-7123	12.00	6.00	3.50	8.90
05	991-051-7123	14.00	8.00	5.50	10.90
06	991-061-7123	16.00	10.00	7..50	12.90
07	991-071-7123	18.00	12.00	9.50	14.90
08	991-081-7123	20.00	14.00	11.50	16.90
09	991-091-7123	22.00	16.00	13.50	18.90
10	991-101-7123	24.00	18.00	15.50	20.90
11	991-111-7123	26.00	20.00	15.50	22.90
12	991-121-7123	28.00	22.00	15.50	24.90
13	991-131-7123	30.00	24.00	15.50	26.40
14	991-141-7123	32.00	26.00	15.50	28.90
15	991-151-7123	34.00	28.00	15.50	30.90
16	991-161-7123	36.00	30.00	15.50	32.90

X.± 0.35	X.°± 5°
.X± 0.20	.X°± 3°
.XX± 0.15	.XX°± /
.XXX± 0.10	.XXX°± /
UNITS:	mm

The information in this document is property of JiDC company and should not be copied or reproduced in any other way, without written permission.

Guangdong JiDe Precision Electronics Co., Ltd
广东济德精密电子有限公司

TITLE: 2.0mmPITCH 90° WAFER SMT TYPE	PART NO. 991-XX1-7123
APPD:	DWG NO: C-991-XX1-7123
CHKD:	SCALE N/A / SHEET 1/1 / REV. A0
DRAW:	