REV.	DESCRIPTION	ECN NO.	NAME	DATE

General tolerances(mm)														
0 ~ 3	>3 ~ 6	>6 ~ 10	>10 ~ 18	>18 ~ 30	>30 ~ 50	>50 ~ 80	>80 ~ 120	>120 ~ 180	>180 ~ 250	>250 ~ 315	>315 ~ 400	>400 ~ 500	>500	0.1/10
±0.12	±0.18	±0.22	±0.26	±0.31	±0.37	±0.57	±0.80	±0.93	±1.05	±1.15	±1.60	±2.20	±2.50	±2°

Product model	PIN	A	B	C
JCB508-HSKGC2P	2	11.66	5.08	20.32
JCB508-HSKGC3P	3	16.74	10.16	25.40
JCB508-HSKGC4P	4	21.82	15.24	30.48
JCB508-HSKGC5P	5	26.90	20.32	35.56
JCB508-HSKGC6P	6	31.98	25.40	40.64
JCB508-HSKGC7P	7	37.06	30.48	45.72
.....	....	.....	.....	.....
JCB508-HSKGC22P	22	5.08xN+1.5	5.08x(N-1)	5.08xN+10.16

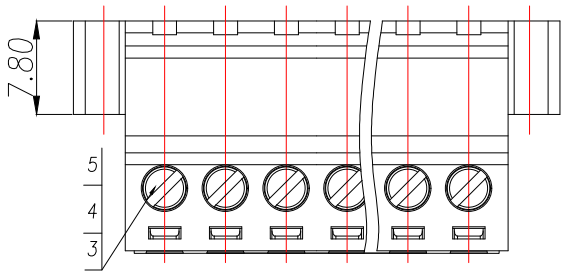

UL Standard	B	C	D
Rated Voltage(V)/Current(A)	300/15	/	300/10
IEC Standard			
Overvoltage Category/Pollution Degree	Ⅲ/3	Ⅲ/2	Ⅱ/2
Rated Voltage(V)/Current(A)	/	320/20	/
Rate Impulse Voltage(KV)	4		
Torque Tightening(N·m/Lb.in)	M2.5, 0.4/3.54		
Wire Range(rigid and flexible)(mm²/AWG)	0.2~2.5/28~12		
Pitch(mm)/Poles	5.08/N=02~22P		
Stripping length(mm)	7-8		
Operating temperature(°C)	-40~+105		
Conform to RoHS	Yes		

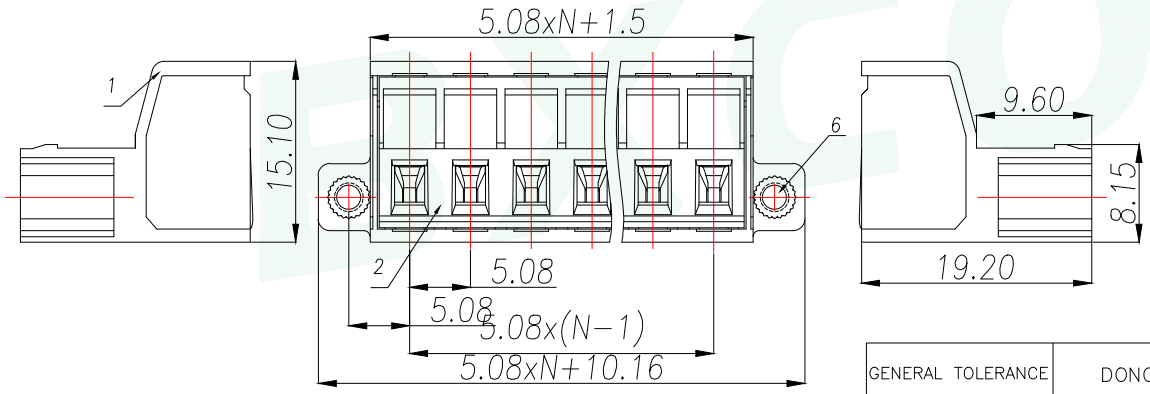

ITEM	NAME OF PART	MATERIAL	NOTES
6	Nut	Copper alloy	M2.5/Zn Plated
5	Screws	Steel	M2.5/Zn Plated
4	Cage	Copper alloy	Ni plated
3	Pin	Copper	Sn plated
2	Cover	PA66	UL94V-0
1	Housing	PA66	UL94V-0

GENERAL TOLERANCE					
DIM.	TOL.	DONGGUAN BAOXUN PRECISION TECHNOLOGY CO., LTD			BXCONN®
X		TITLE: Socket-type terminal			
X.X	±0.30				
X.XX	±0.25	DWG. NO.: JCB508-HSKGCNP			DRAWN: MAX
X.XXX	±0.15				
GENERAL ANGLE:	±3°	PART NO.: JCB508-HSKGCNP			CHECKED: ELLA
		UNIT: mm	SCALE: none	SHEET: 1of 1	DWG. SIZE: A4 / LAYER: bxconn / APPROVED: WILL