Preliminary DATA SHEET

GSM1524: 1465 to 1565MHz High Linearity 24dBm Broadband Power Amplifier

Figure 1. 16 Pad 3 x3 mm Laminate Package

Product overview

GSM1524 is a two-stage HBT small cell power amplifier for indoor cellular base stations. It covers low band from 1465MHz to 1565MHz. This PA can deliver 24dBm 4G LTE linear output power with ACPR below -50dBc for 20M LTE application and power gain higher than 25 dB

Key Features

- 1465MHz – 1565MHz
- 25dB Gain
- 10% PAE at 24dBm output power
- Support 100MHz NR signal
- Below -50dBc ACPR at 24dBm linear output power
- Input/output internally matched to 50Ohm
- Integrated temperature compensation circuits Compact and low-cost 3mm x 3mm LGA package(MSL3, 260℃ per JEDEC J-STD-020)
- ESD Level: HBM 1000V; CDM 1000V
- ROHS compatible

Applications

- TDD/FDD 4G LTE and 5G NR systems
- Power amplifier for micro-base stations
- Active antenna array and massive MIMO
- Distributed Antenna System (DAS)
- Customer Premises Equipment (CPE)

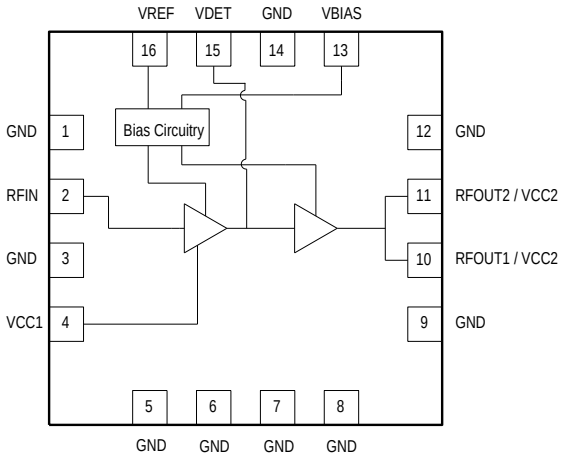

Figure 2. GSM1524 Function Block Diagram

Table 1. Pin-to-Pin Compatible PA Family

Part Num	Frequency (MHz)	3GPP Band
GSM0520	500-700	
GSM1320	1465-1565	
GSM1324	1200-1395	
GSM1520	1450-1660	
GSM2620	2496-2960	
GSM3520	3300-3600	

Ordering Information

Part No.	Description
GSM1524	1465-1565MHz 24dBm linear PA, 7' Reel with 1500pcs