SAMZO | REAC/ROHS

REV	ECN NO	DESRIPTION	DESIGN	APPROVAL	DATE
A1	NEW	Replace frame			2018.06.12

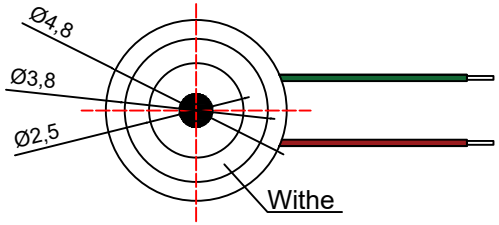

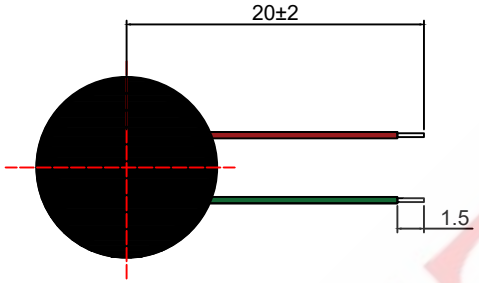

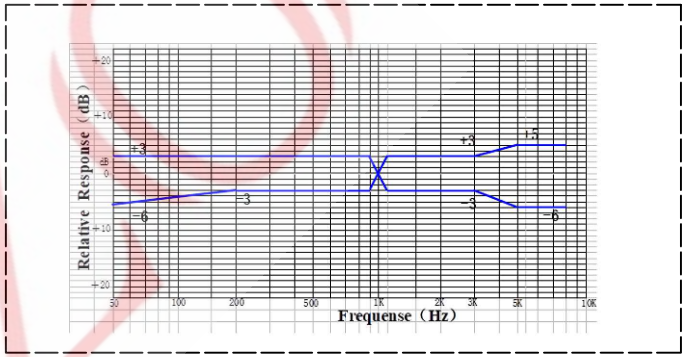

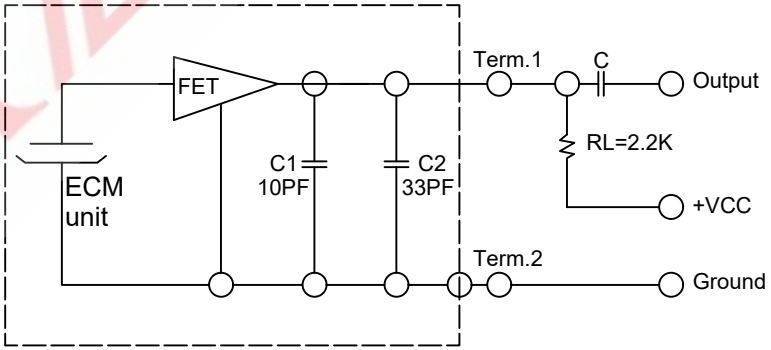

MIC.CASE C1=10PF C2=33PF RL=2.2 VS=2.0V

MEASUREMENT CIRCUIT测量线路

MIC 4015 L20-C2-383

Ⓐ Ⓑ Ⓒ Ⓓ Ⓔ

A:MIC.Microphone.
B:4015.Product series.
C:L20.Wire length: L=20mm.
D:C2.Strong resistance.
E:383.Number.

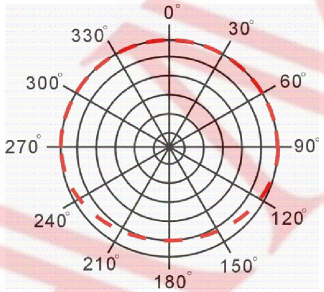

Microphone 360°Directional Response

ITEM	DESCRIPTION	MATERIAL	QTY	FINSH/COLOR					
D	PCB元件	电阻+电容		----------					
E	铜环	黄铜/紫铜	1	----------				GENERAL TOLERANCE	
D	背板	PCB板	1	----------				⩾0~2<	±0.15
C	垫圈	硅胶	1	----------	DESIGN	WANGGUIFA	2018.06.12	⩾2~5<	±0.25
B	隔膜	聚四氟乙烯	1	----------	CHECKED	ZHENGUILAN	2018.06.12	⩾0~2<	±0.15
A	外壳	SPCC	1	镀镍	APPROVED	LILIANJIANG	2018.06.14	⩾5	±0.35

FIRST VIEW

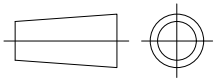

SCALE	1:1	UNIT	mm

The copyright belongs to samzo parts [China] Co., Ltd. please use the material after samzo parts agree to authorize. The final right of interpretation belongs to samzo parts.
WWW.KKK-JP.COM

SAMZO COMPONENTS
Electronic switch and connector manufacturer

TITLE:: 4.8mm焊线式 强抗 L=20mm
DWG NO: 4015-P0010
PART NO: 401520230600
MODEL NO: **MIC-4015-L20-C2-383**
NAME: MICROPHONE