SAMZO | REAC/ROHS

REV	ECN NO	DESRIPTION	DESIGN	APPROVAL	DATE
A1	NEW	Replace frame			2018.06.14

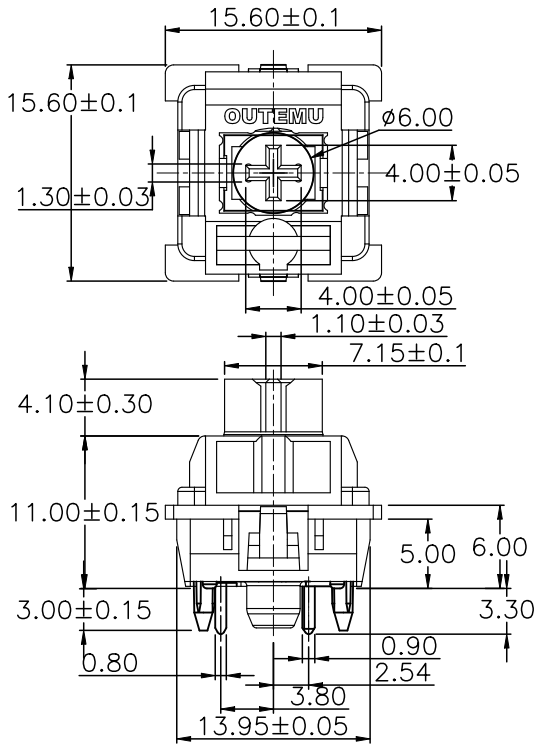

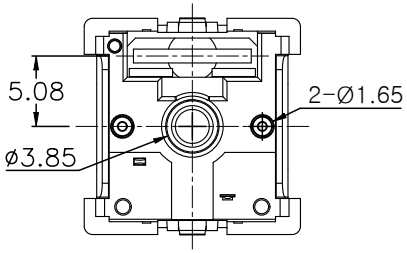

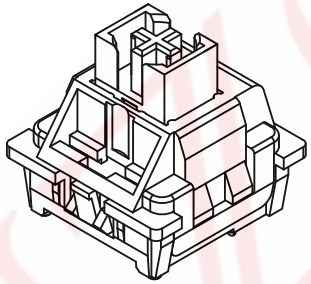

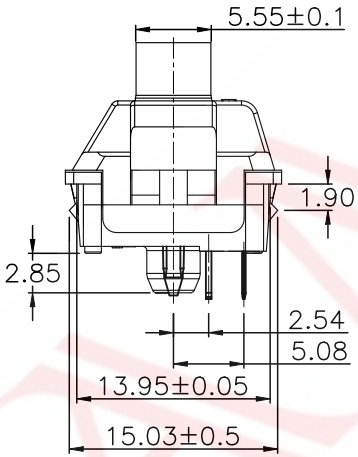

Technical parameters:

Voltage:	12 VAC/DC max 2 VDC min
Current:	10mA AC/DC max 10μA DC min
Insulation Resistance:	100MΩ at 100V(min)
nitial Contact Resistance:	200mΩ max
Bounce Time:	≤5msec
Capacitance:	<2pF (at 1kHz)
Operating Temperature:	−10°C to +70°C
Storage Temperature:	−40°C to +70°C
Flammability Rating:	UL94HB
Solderability:	Wave solder, 5 seconds at 230±5°C
Long life :	50,000,000 cycles
Operating Force:	60±10gf
Total Travel:	3.30±0.2mm
Pretravel:	2.00±0.6mm
Choice of feel:	soft tactile
防尘防水等级:	NO（无）

28 1 151 8 2 D M

Ⓐ Ⓑ Ⓒ Ⓓ Ⓔ Ⓕ Ⓖ

A. 系列:28:键盘轴
B. 贴装方式:1-立插
C. 主体高度:151-15.1mm
D. 使用寿命:8-5000万次
E:模具编码:2-C59
F:物料要求:D-定制
G:材质颜色:M-全透明

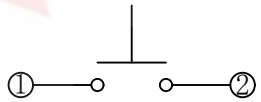

Circuit Diagram

序号	零件	编号	用量	材质	电镀/色	备注
6	Spring	/	1PCS	Stainless Steel	/	UL94HB
5	Kone	/	1PCS	PA12	透明	
4	Housing	/	1PCS	PC	透明	UL94HB
3	Cover	/	1PCS	PC	透明	UL94HB
2	Contacts	/	2PCS	AGPDNI	PLATED GOLD	
1	Terminal	/	2PCS	COPPER	/	

			GENERAL TOLERANCE	
			≥0~2<	±0.15
DESIGN	WANGGUIFA	2018.06.12	≥2~5<	±0.25
CHECKED	ZHENGUILAN	2018.06.12	≥0~2<	±0.15
APPROVED	LILIANJIANG	2018.06.14	≥5	±0.35

FIRST VIEW

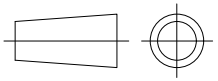

SCALE	1:1	UNIT	mm

The copyright belongs to samzo parts [China] Co., Ltd. please use the material after samzo parts agree to authorize. The final right of interpretation belongs to samzo parts.
WWW.KKK-JP.COM

SAMZO COMPONENTS
Electronic switch and connector manufacturer

TITLE:: 全透明键盘轴H15.1MM-段落
DWG NO: 281151-PC059
PART NO: 2811513-CH593
MODEL NO: 28115182DM
NAME: PUSH SWITCH