YAZAKI PART NO.	COLOR
7122-8306	NATURAL
7122-8306-30	BLACK
△4 7122-8306-80	BROWN
△5 7122-8306-90	BLUE

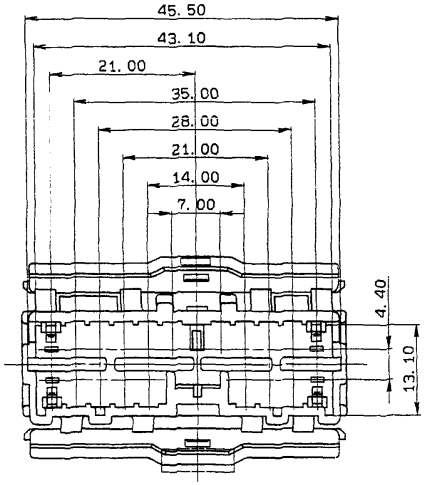

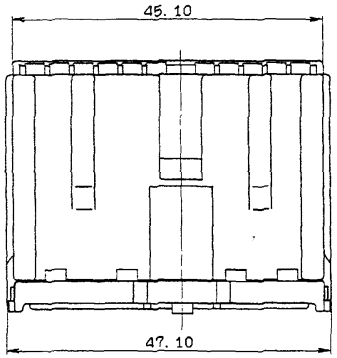

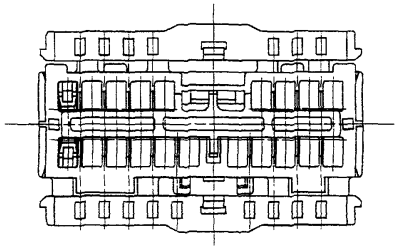

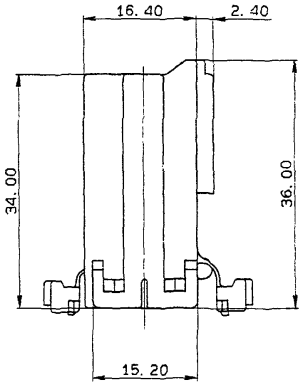

注記

1. 嵌合相手は、7123-8306 ETC..
2. 使用ターミナルは、7114-1470、7114-1470-08、
7114-1475、7114-1475-08.

NOTE

1. MATCHING HOUSING NO. :7123-8306 ETC..
2. MATCHING TERMINAL NO. 7114-1470、7114-1470-08、
7114-1475、7114-1475-08.

LET	DATE	REVISION RECORD	NO.	CHKD
△6	90. 06. 08	色品番追加	C90-6620	青石
△4	89. 04. 03	色品番追加	C89-6498	長谷川
-	88. 02. 25	新 設	8MC-0256	榎本

GENERAL TOLERANCE

	10MAX	50MAX	100MAX	250MAX	2500VR	ANGLE	ECCENT
A	±0.15	±0.2	±0.3	±0.5	±0.75	±30'	0.1
B	±0.2	±0.3	±0.55	±0.95	±1.4	±30'	0.1
C	±0.3	±0.5	±0.8	±1.4	±2	±30'	0.15

SPECIFIED

WEIGHT g

CUSTOMER		
CUSTOMER PART NO.	CUSTOMER DWG NO.	
OFFICE	STDLIB NO.	
VENDOR		
VENDOR NO.		

DWG TYPE	DWG SOURCE	DWG DATE	UNIT	SCL	ANGLE
R	新 設	88. 02. 25	mm	2/1	3

APPROVED	CHECKED	CHECKED	DESIGN	DRAWN
三浦			斉藤 仁	貞
'90.6.25			88. 01. 12	'90.06.22

MATL. SPEC. P. B. T

TREAT. & FIN.

NAME SDLタイプ コネクタ ハウジング 20P (M)

PART NO. 7122-8306 ETC.

DWG NO. 7122-8306:R

TRIAL PART NO. 086122-1314

YAZAKI CORPORATION

ISSUE MARK

Mouser Electronics

Authorized Distributor

Click to View Pricing, Inventory, Delivery & Lifecycle Information:

Yazaki:
71228306