SPECIFICATIONS		
PARAMETERS	VALUES	UNITS
RATED VOLTAGE	12	Vdc
OPERATING VOLTAGE RANGE	3 ~ 16	Vdc
RATED CURRENT (MAX)	8	mA
MINIMUM SPL @ 10 CM	100	dBA
RESONANT FREQUENCY	3,700 ± 500	Hz
TONE OR PULSE RATE	CONTINUOUS	0 pulse /sec
OPERATING TEMPERATURE	-20 ~ +60	°C
STORAGE TEMPERATURE	-30 ~ +70	°C
HOUSING MATERIAL	ABS	-
TERMINAL MATERIAL	LEAD WIRE	-
WEIGHT	5	grams

THIS DOCUMENT CONTAINS DATA PROPRIETARY TO PROJECTS UNLIMITED, INC. ANY USE OR REPRODUCTION, IN ANY FORM, WITHOUT PRIOR WRITTEN PERMISSION OF PROJECTS UNLIMITED, INC. IS PROHIBITED.
©2003, Projects Unlimited Inc.

REVISION HISTORY			
LTR	DESCRIPTION	DATE	APPROVED
-	RELEASED FROM ENGINEERING	10/26/2005	
A	ADDED SOUND EMISSION HOLE DIAMETER	3/3/2008	R.W.
B	CORRECTED WIRE LENGTH	2/11/2010	B.R.
C	REVISED TO INVENTOR 3-D DRAWING TEMPLATE	5/2/2010	B.R.
D	REVISED TOLERANCES ON HOLE TO HOLE & HOLES	8/6/2010	B.R.

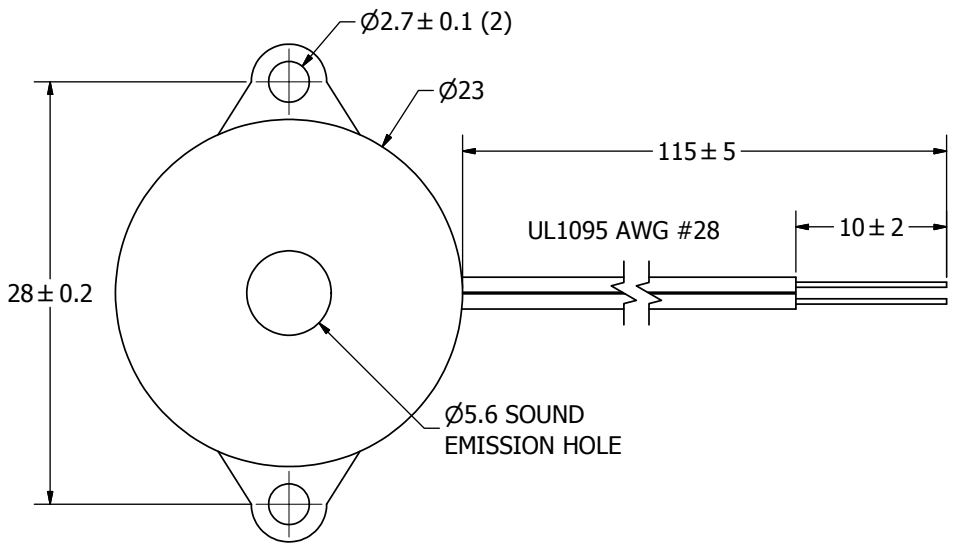

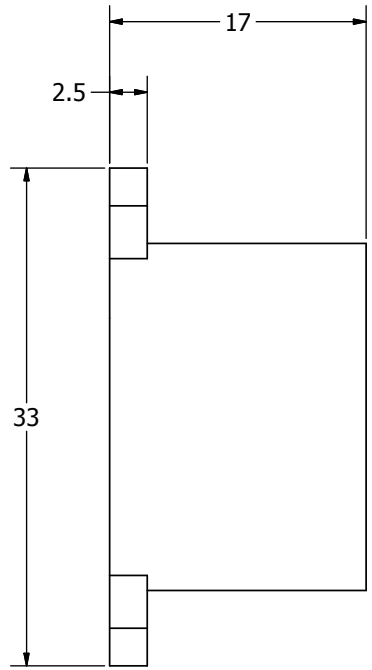

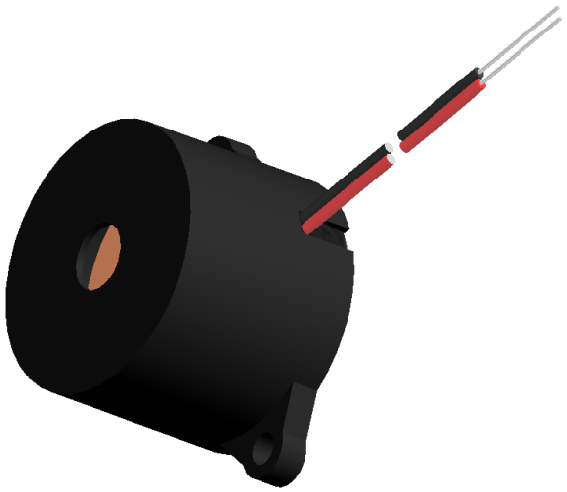

NOTES:

1. ALL DIMENSIONS ARE IN MILLIMETERS.
2. SPECIFICATIONS SUBJECT TO CHANGE OR WITHDRAWL WITHOUT NOTICE.
3. THIS PART IS RoHS 2002/95/EC COMPLIANT.

UNLESS OTHERWISE SPECIFIED: DIMENSIONS ARE IN MILLIMETERS, TOLERANCES ARE ±0.5 AND ANGLES ARE ±3°.	SIZE A3	Designed by	Date	Checked by	Date	Approved by	Date	Drawn Date
		J.A.F.	10/26/2005	E.P.	10/26/2005	B.R.	10/26/2005	5/2/2010
AI-2337-TF-LW115-R.idw		pui audio inc a projects unlimited company		AI-2337-TF-LW115-R				
				Indicator			Edition -	Sheet 1 / 1