Product NO.	RHT-634-3065			
ISSUE	DESCRIPTION	DWN	DATE	APPROVEN
R1.0	First issue	Ding	2021/11/11	JIM.KING

Pin Layout

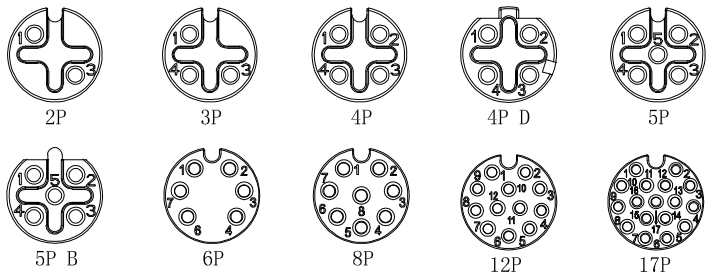

Specifications

Contacts	2	3	4	4D	5	5B	6	8	12	17
Rated current/ Rated voltage	4A/250V	4A/250V	4A/250V	4A/250V	4A/60V	4A/60V	2A/30V	2A/30V	1.5A/30V	1.5A/3
Rated pulse voltage	2500V	2500V	2500V	2500V	1500V	1500V	800V	800V	800V	800V
Insulation resistance (MΩ)	≥100	≥100	≥100	≥100	≥100	≥100	≥100	≥100	≥100	≥10
Contact resistance (mΩ)	≤5	≤5	≤5	≤5	≤5	≤5	≤5	≤5	≤5	≤5

Panel Cut-out Dimensions

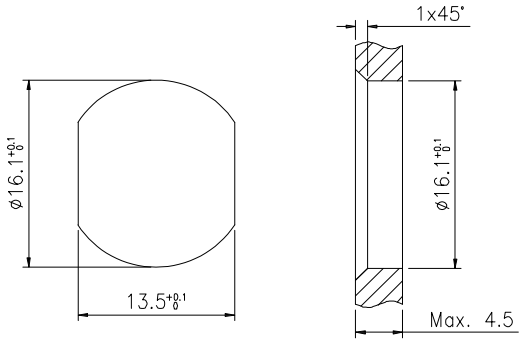

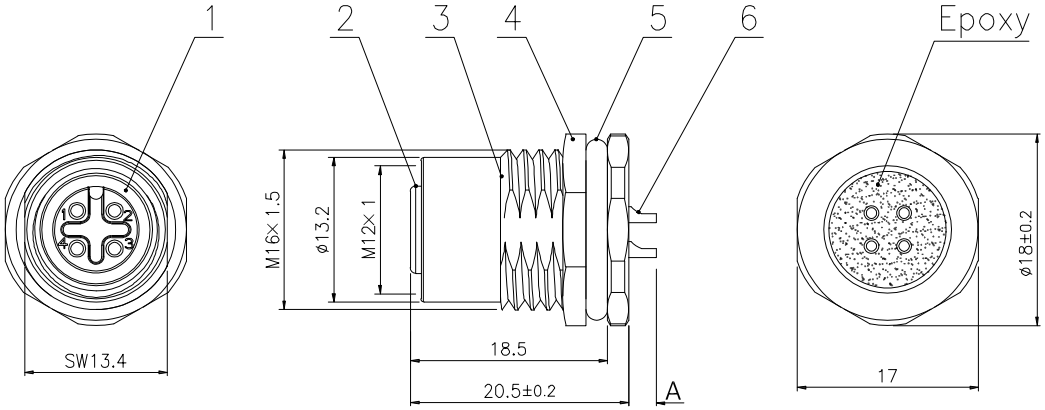

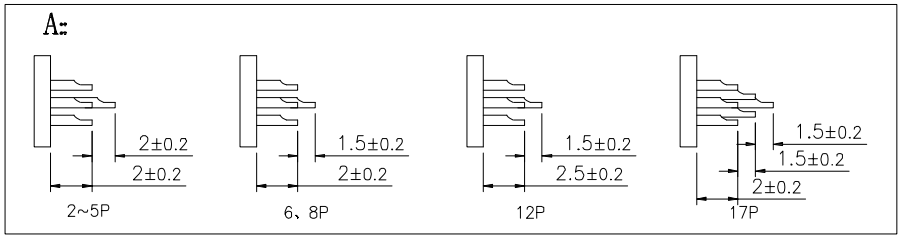

No.	Specification	Material	Treat	Unit	O'tv
6	Contacts	Brass	Gold plated	pc	2~17
5	O-ring	Rubber	/	pc	1
4	Nut	Brass	Nickel plated	pc	1
3	Body	Brass	Nickel plated	pc	1
2	Connector insert	PA66	/	pc	1
1	O-ring	Rubber	/	pc	1

-TOLERANCES-
UNLESS OTHERWISE SPECIFIED

UNLESS OTHERWISE SPECIFIED
TOLERANCES FOR MILLIMETERS ARE:
0.5 - 8mm ± 0.20mm
8 - 30mm ± 0.25mm
30 -120mm ± 0.30mm

dosinconn DOSIN INDUSTRIAL(HK)CO.,LTD
江门市德索连接器有限公司
Jiangmen Dosin Connector Co., LTD
Web:http://www.dosinconn.com
Dosin2005@dosin-china.com
Tel:(0086)769-81153906
Fax:(0086)769-81875836

PART DESCRIPTION:
M12 Female,Panel Mount,Solder,Front fastened

Appr: JIM.KING	P/N: RHT-634-3065				
Check:	Date	Scale	Unit	Type	Page
Draw: DING	2021.11.11	Free	MM	Z	1/1