CUSTOMER

REV.	ECN NO.	DESCRIPTION	DATE	DESIGN

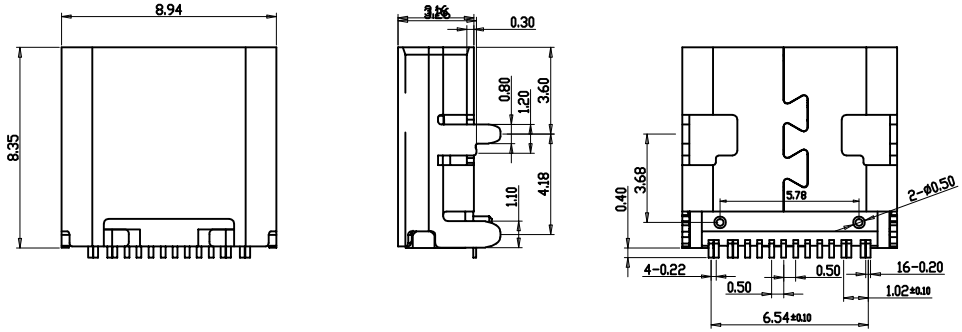

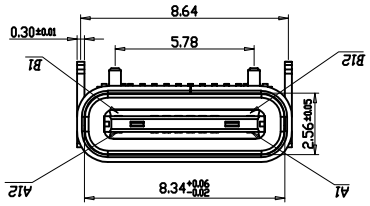

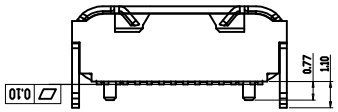

1. ELECTRICAL CHARACTERISTICS:
   1-1. CONTACT RESISTANCE: 30mΩ MAX.
   1-2. DIELECTRIC WITHSTANDING VOLTAGE: 100V AC FOR ONE MINUTE.
   1-3. INSULATION RESISTANCE: 100MΩ MIN. MEASURED BY 500 VDC
2. MECHANICAL CHARACTERISTICS:
   2-1. INSERTION FORCE :0.5-2.0Kgf(REF.)
   2-2. WITHDRAWAL FORCE :0.8-2.0Kgf(REF.)
3. LIFE TEST: 10,000 CYCLES.
4. TO CONFORM TO THE KRCONN HAZARDOUS SUBSTANCE FREE SPEC.

A1	GND	B12	GND
A4	VBUS	B9	VBUS
A5	CC1	B8	SBU2
A6	DP1	B7	DN2
A7	DN1	B6	DP2
A8	SBU1	B5	CC2
A9	VBUS	B4	VBUS
A12	GND	B1	GND
PIN	SIGNAL NAME	PIN	SIGNAL NAME

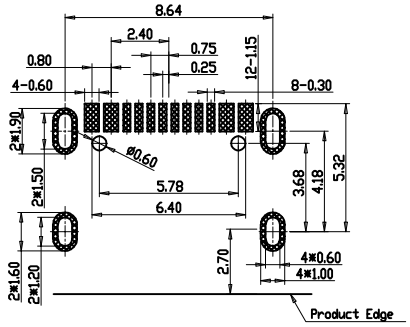

RECOMMENDED P.C.B. LAYOUT (T:1.00mm)

TOLERANCE UNSPECIFIED ±0.05mm

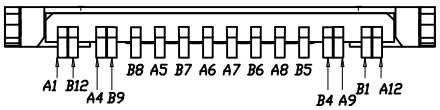

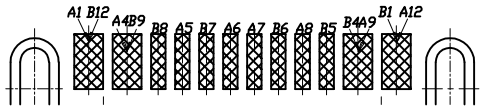

NO.	DESCRIPTION	MATERIAL	REMARKS	QTY
6	SHELL	STAINLESS STEEL	NI Plated	1PCS
5	SHIELDING PLATE	STAINLESS STEEL	---	1PCS
4	MD	HIGH TEMPERATURE PLASTIC	BLACK	1PCS
3	CONTACT	COPPER ALLOY	Au/NI Plated	1SET
2	CONTACT	COPPER ALLOY	Au/NI Plated	1SET
1	HOUSING	HIGH TEMPERATURE PLASTIC	BLACK	1PCS

TOLERANCE		NAME(INTENDED USE) CUSTOMER DRAWING	FUYOU 广东富盈兴业精密科技实业有限公司 Guangdong FUYOU Precision Electronic Technology Co.,LTD.
X.X ±0.30	X.° ±10°	PART NO. FY23-41TC162F1835-01	TITLE: TYPE C 2P焊线带螺牙
.XX ±0.20	.X° ± 8°		
.XXX ±0.10	.XX° ± 5°	DESIGN: ZXM	DRAWG NO. FY23-41TC162F1835-01
UNITS	mm		
MATERILA	----	CHED:	SCALE 1:1 / SHEET 1/2 / REV. A
FINISH	-----	APPD:	